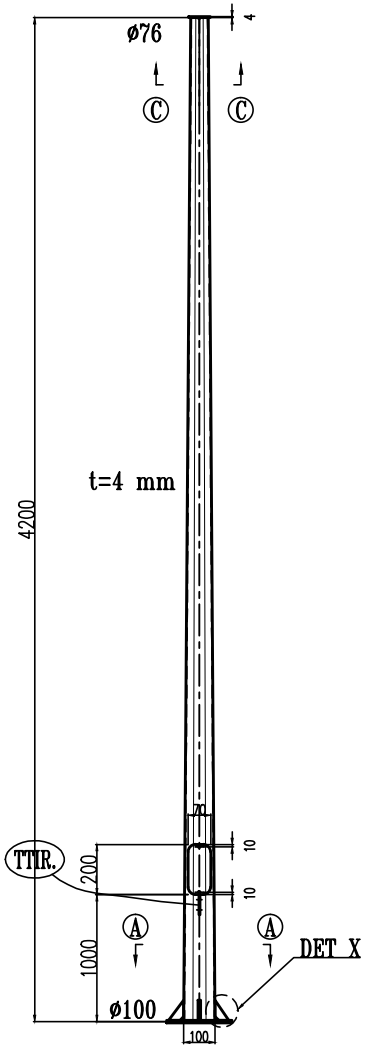

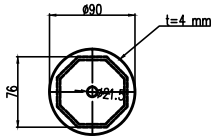

C-C KESITI

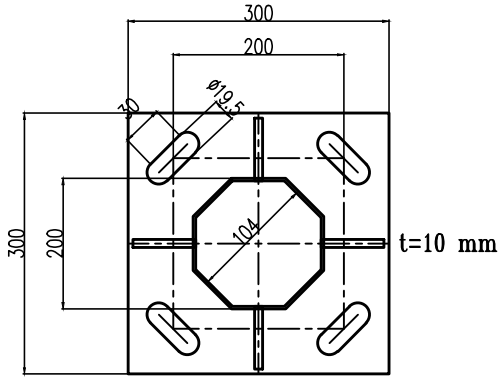

A-A KESITI

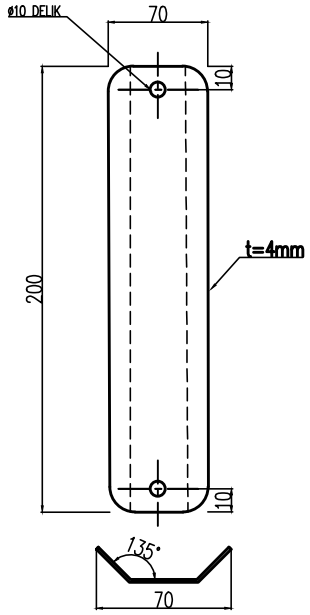

DOOR DETAIL

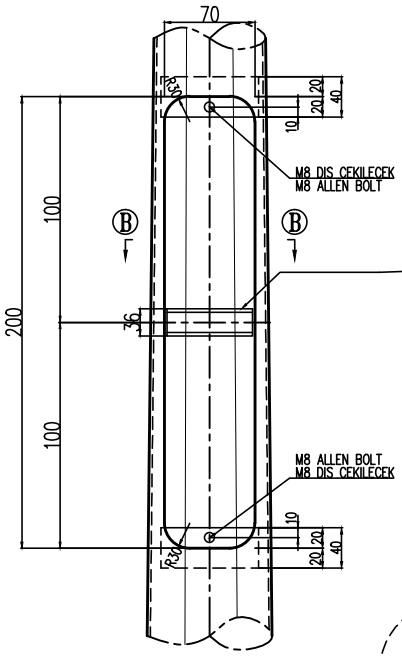

DOOR DETAIL

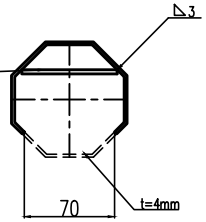

B-B SECTION

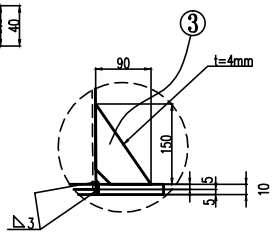

DETAY-X

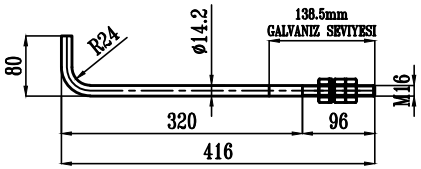

ANKRAJ DETAYI

REVIZYON REVISION	B A			
PROJE ADI PROJECT	**4.2M TRAFFIC POLE**			
MITAS POLES A valmont COMPANY	HAZIRLAYAN DESING BY	CIZEN DRAWN BY	KONTROL CHECKED BY	ONAY APPROVED BY
	MURAT TEKE	MURAT TEKE	MURAT TEKE	YUNUS SIVRITAS
	OLCEK SCALE	TARIH DATE	PAFTA NO DRAWING NO	REV. 0
	NTS	15/09/2011	*	

Eski Guvercinlik Yolu No: 113
P.K. 9 Gazi Ciftligi 06560 ANKARA
Tel (0312) 296 20 00 (Pbx)
Fax (0312) 296 29 99
e-mail info@mitastower.com